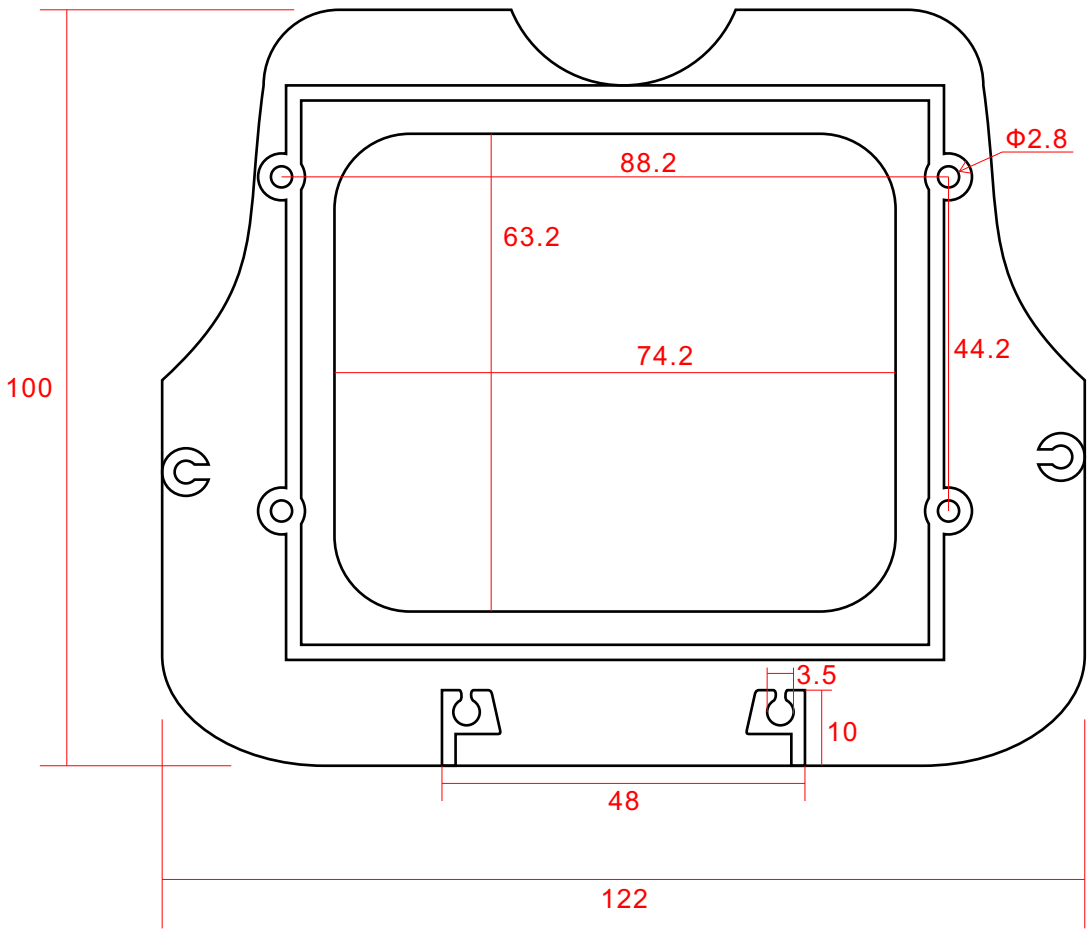
Φ2.8
88.2
63.2
74.2
44.2
100
3.5
10
48
122

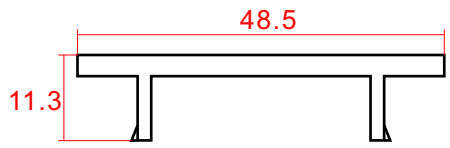
48.5
11.3

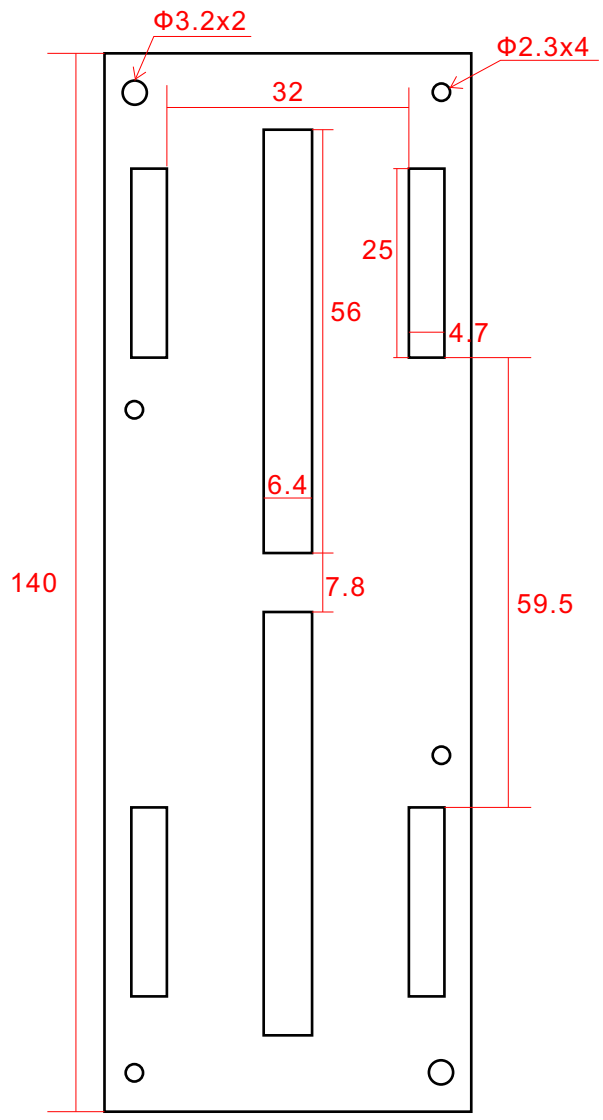
Φ3.2x2
Φ2.3x4
32
25
56
4.7
6.4
140
7.8
59.5

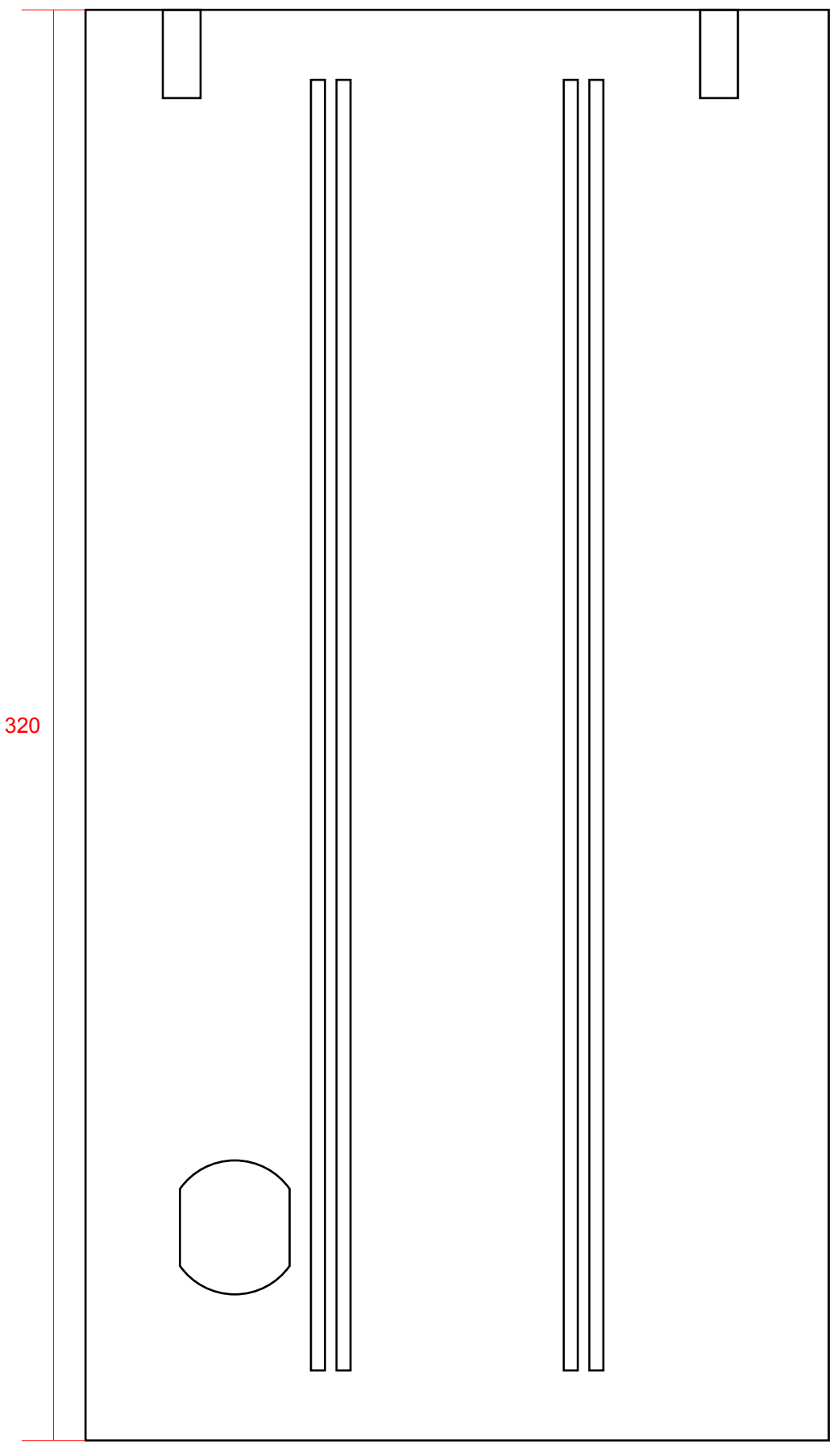
320