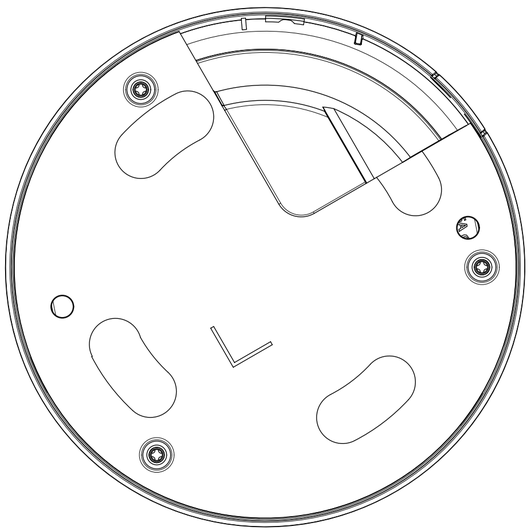

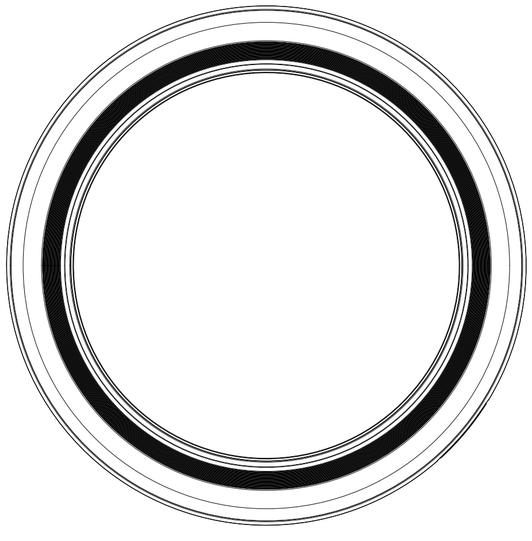

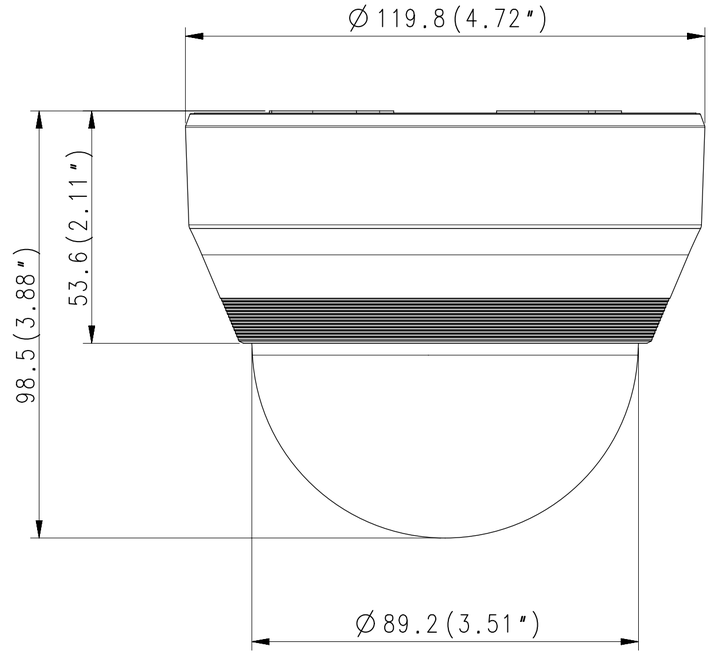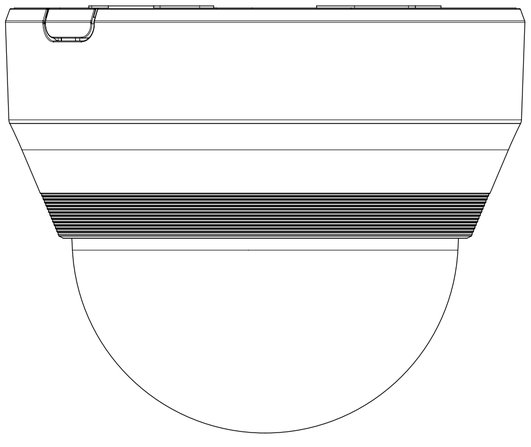
∅119.8(4.72")
53.6(2.11")
98.5(3.88")
∅89.2(3.51")