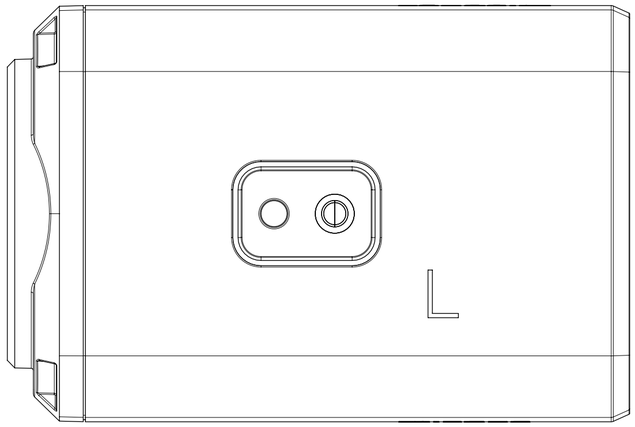

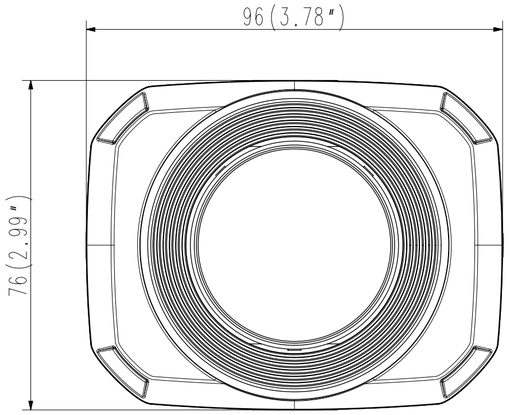
96(3.78")
76(2.99")

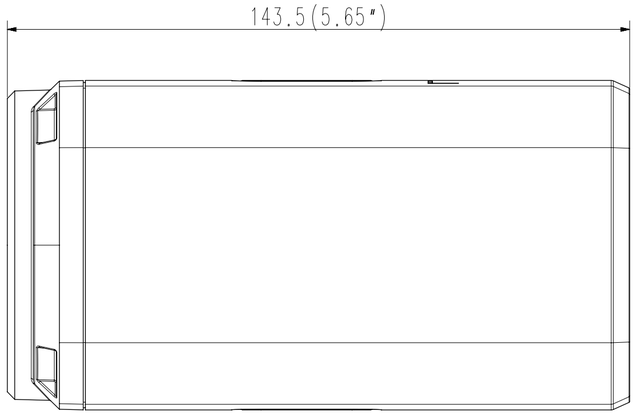
143.5(5.65")

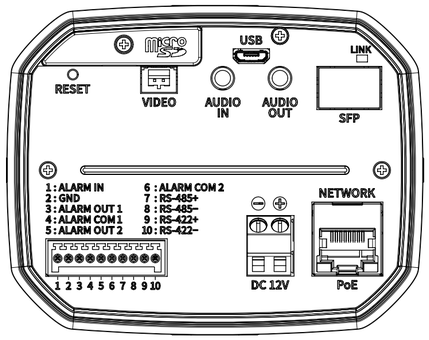
USB
LINK
RESET
VIDEO
AUDIO IN
AUDIO OUT
SFP
1:ALARM IN
2:GND
3:ALARM OUT 1
4:ALARM COM 1
5:ALARM OUT 2
6:ALARM COM 2
7:RS-485+
8:RS-485-
9:RS-422+
10:RS-422-
NETWORK
1 2 3 4 5 6 7 8 9 10
DC 12V
PoE

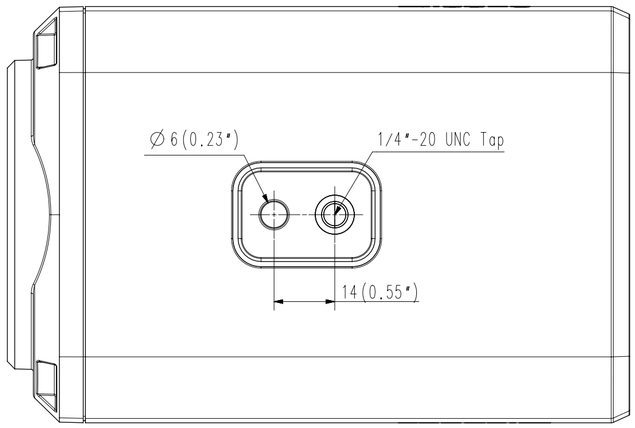
∅6(0.23")
1/4"-20 UNC Tap
14(0.55")

XNZ-6320