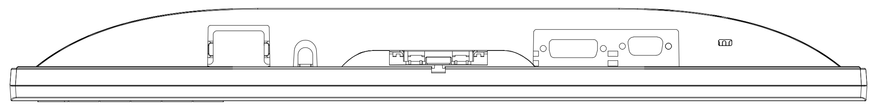

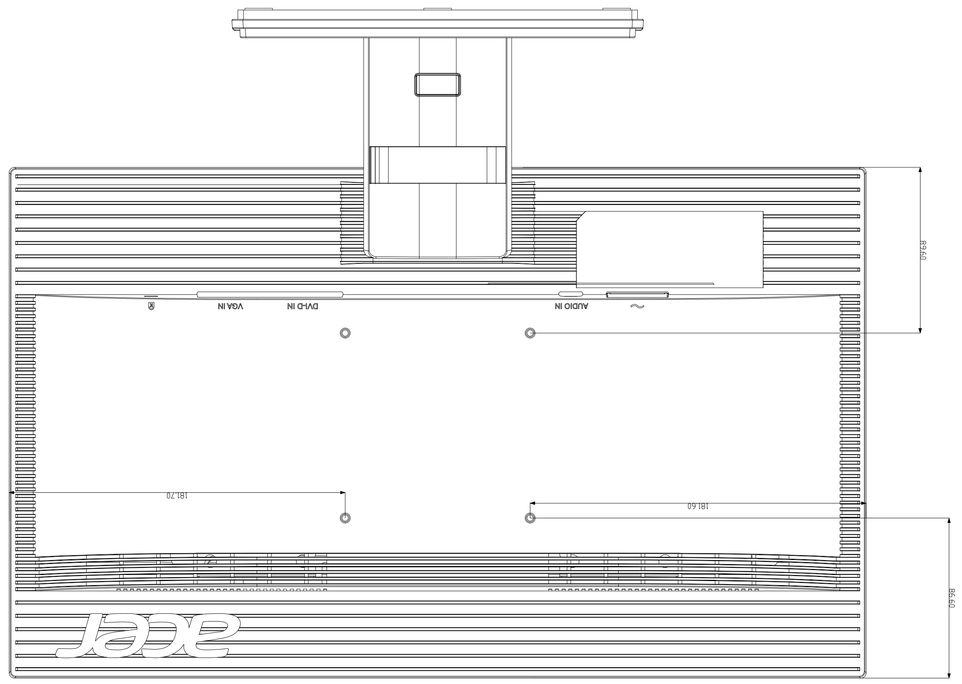
AUDIO IN
DVI-D IN
VGA IN
181.70
181.60
98.40
98.40

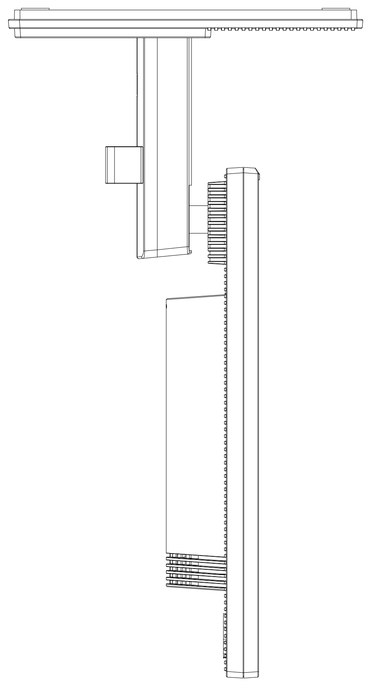

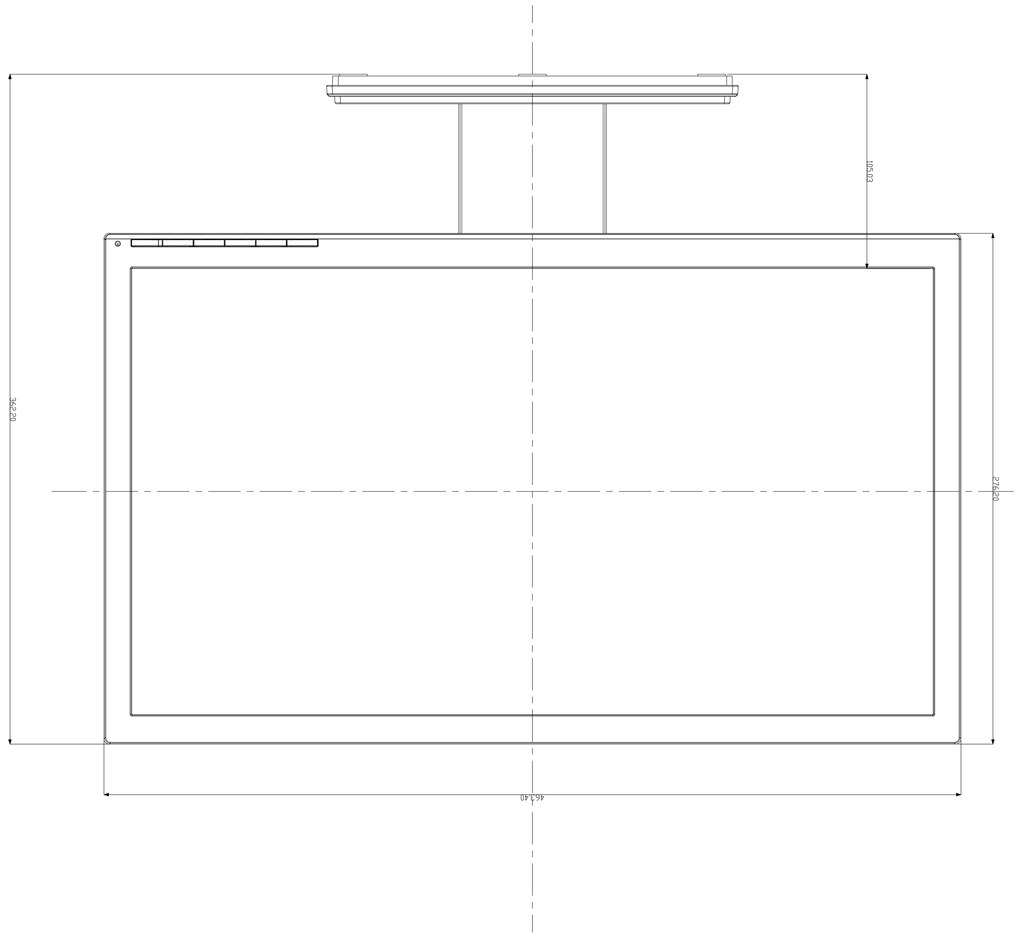
180.03
302.
272.00
467.40

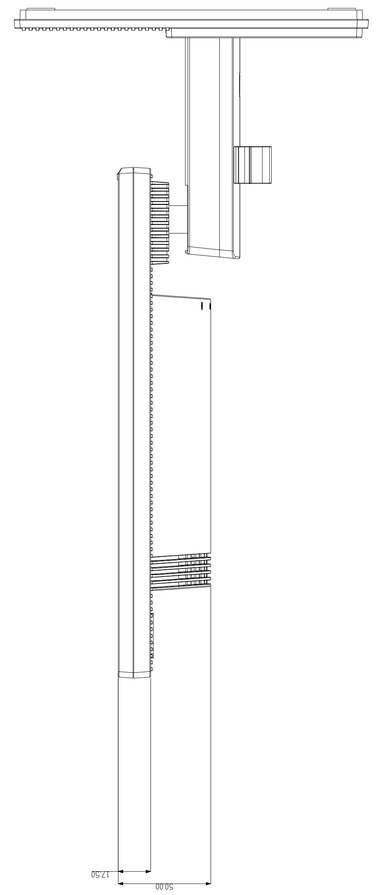
17.00
50.00

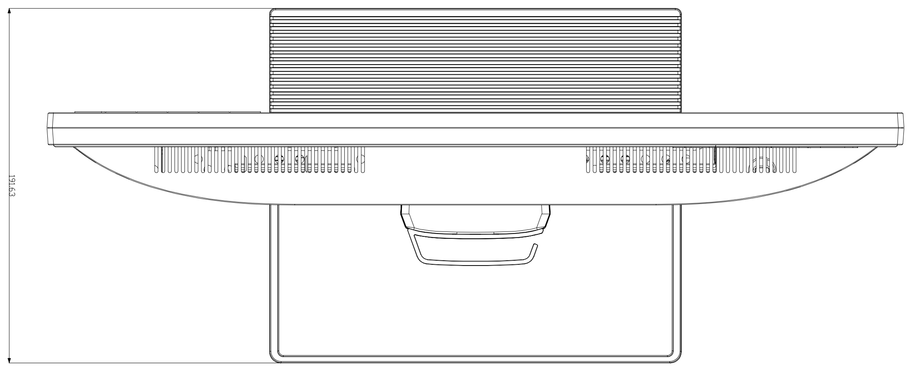
192.63