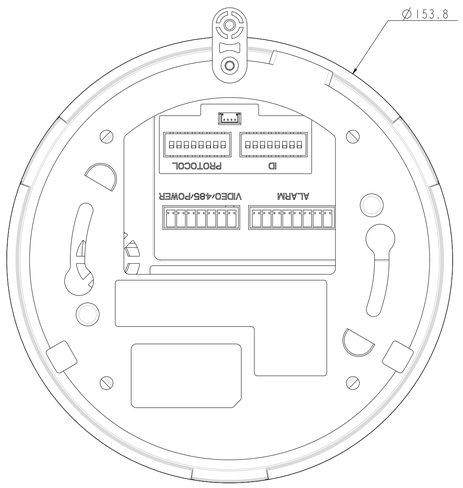

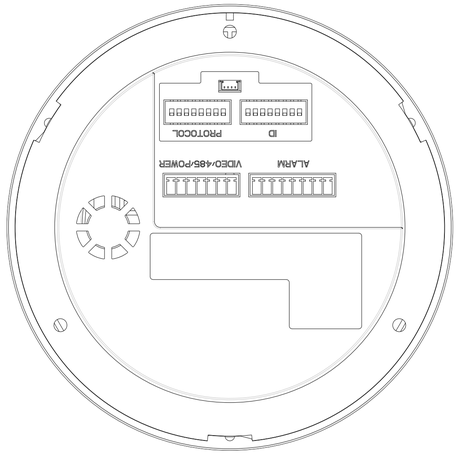

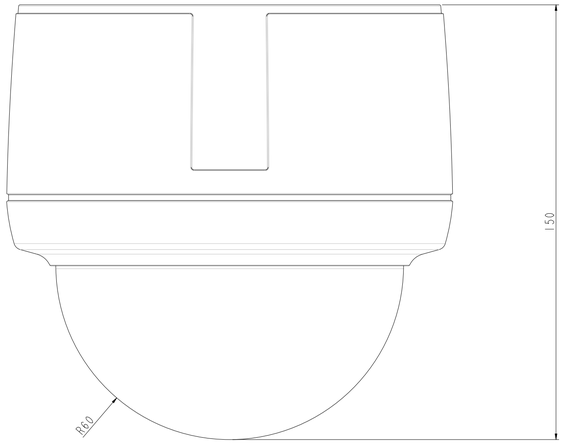

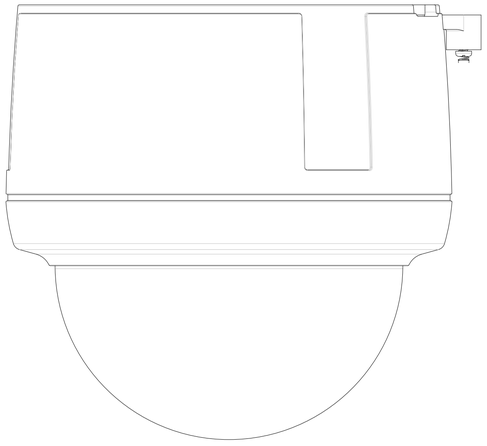

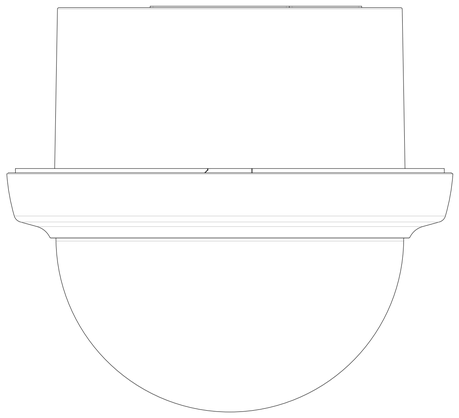

SHOW_SPDI200

Security & Imaging Processing Imaging Division SHOW_SPDI200 A1