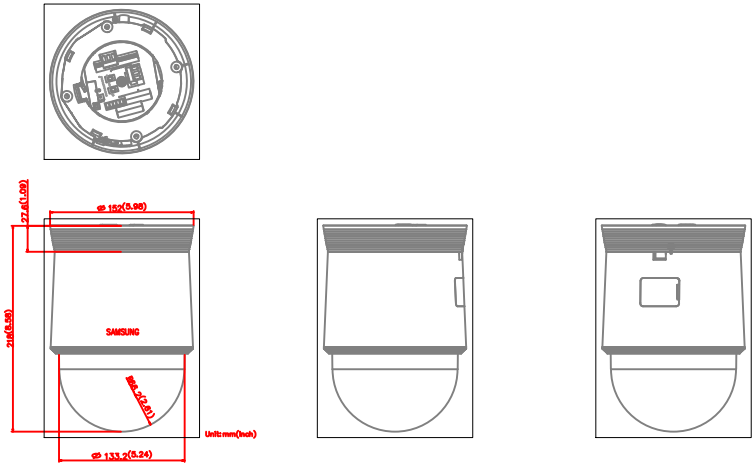

27.6(1.09)
Ø 152(5.98)
218(8.58)
SAMSUNG
Ø 133.2(5.24)
Unit:mm(inch)